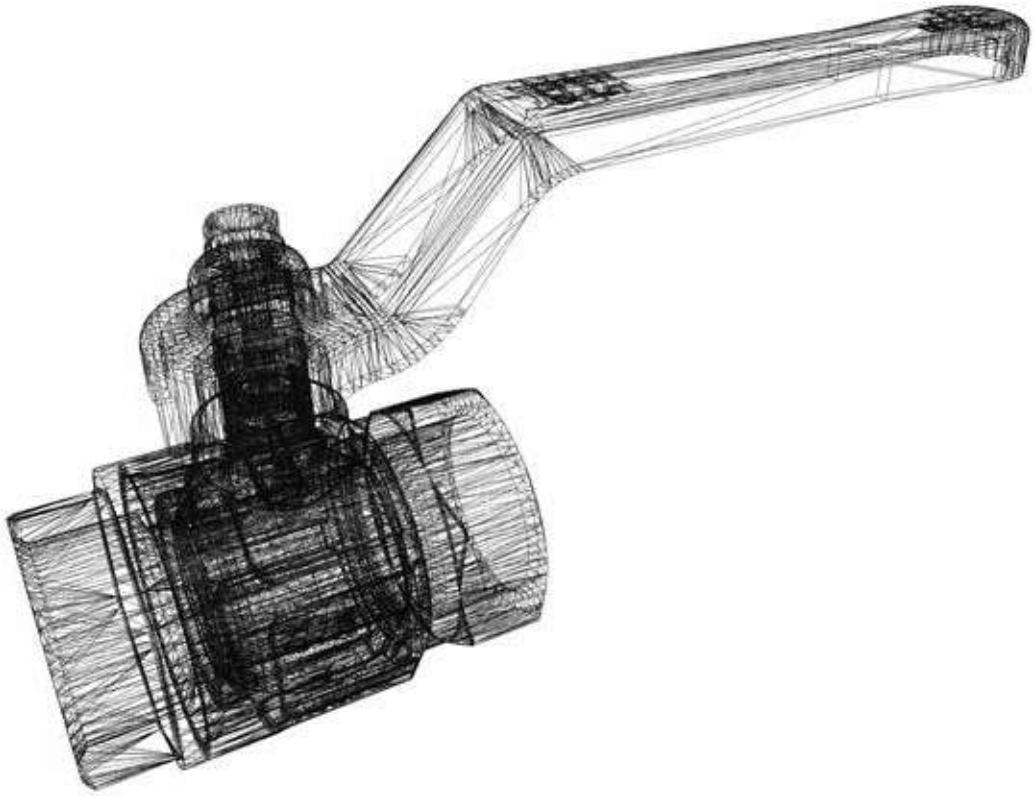

TECHNICAL CATALOGUE

BALL VALVES: IDEAL®

ITAP SpA, founded in Lumezzane (Brescia) in 1972, is currently one of the leading production companies in Italy of valves, fittings and distribution manifolds for plumbing and heating systems. Thanks to fully automated production processes, with 72 tooling machines and 51 assembly lines, we are able to produce 200,000 pieces per day. Our innate pursuit for innovation and observance of technical regulations is supported by the company certification ISO 9001: 2008. The company has always considered its focus on quality as the main tool to obtain significant business results: today ITAP SpA is proud to offer products bearing the approval of numerous international certifying bodies.

ENERGY
EFFICIENT

FULL FLOW BALL VALVES: IDEAL®

SUITABLE FOR DOMESTIC WATER SERVICES, HEATING AND AIR-CONDITIONING PLANTS, COMPRESSED AIR SYSTEMS.

090

IDEAL® BALL VALVE, FULL FLOW

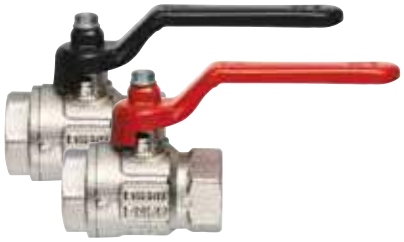

SIZE	PRESSURE	CODE	PACKING
1/4" (DN 8)	50bar/725psi	0900014/N	12/192
3/8" (DN 10)	50bar/725psi	0900038/N	12/192
1/2" (DN 15)	50bar/725psi	0900012/N	12/156
3/4" (DN 20)	40bar/580psi	0900034/N	8/64
1" (DN 25)	40bar/580psi	0900100/N	8/64
1"1/4 (DN 32)	30bar/435psi	0900114/N	4/32
1"1/2 (DN 40)	30bar/435psi	0900112/N	2/26
2" (DN 50)	25bar/362,5psi	0900200/N	2/12
2"1/2 (DN 50)	18bar/261psi	0900212/N	1/7
3" (DN 50)	16bar/232psi	0900300/N	1/4
4" (DN 50)	14bar/203psi	0900400/N	1/2

TECHNICAL SPECIFICATIONS

Female/female threads.
Lever handle in steel.
Body in nickel-plated brass.
Minimum and maximum working temperatures:
-20°C, 150°C in absence of steam.
Threads: ISO228
(equivalent to DIN EN ISO 228 and BS EN ISO 228).
Available also with NPT thread in the sizes 1/4" through 2".
Mention "N" in the code only to order the black handle.

MATERIALS

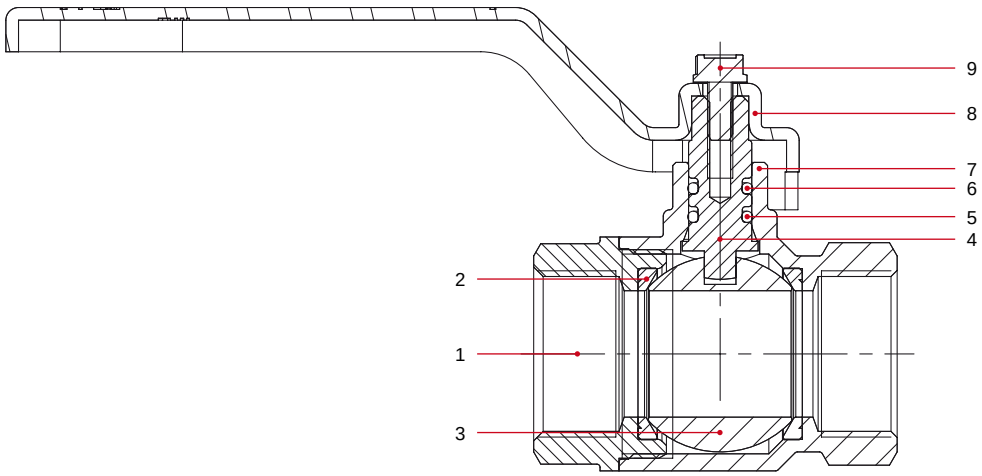

POS.	DESCRIPTION	N.	MATERIAL
1	End adapter	1	Nickel-plated brass CW617N
2	Seat	2	P.T.F.E.
3	Ball	1	Chrome-plated brass CW617N
4	Stem	1	Brass CW614N
5	O-Ring	1	NBR
6	O-Ring	1	VITON®
7	Body	1	Nickel-plated brass CW617N
8	Lever handle	1	Zinc-plated and varnished steel Fe.P.04
9	Screw	1	Zinc-plated steel Fe CB4

OVERALL DIMENSIONS

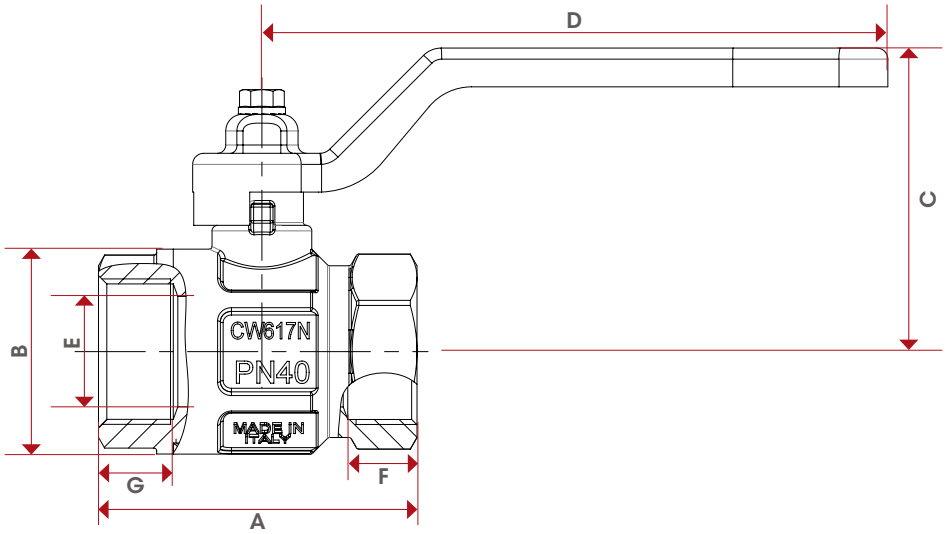

	1/4"	3/8"	1/2"	3/4"	1"	1"1/4	1"1/2	2"	2"1/2	3"	4"
DN	8	10	15	20	25	32	40	50	65	80	100
A	44,4	44,4	50,5	57,5	70	80,5	94,5	112,5	134,5	157	190
B	23,5	24	30,5	37	45,5	57	70	84	109	131	164
C	37	37	41	55	59	75	81	96	115	133	149
D	80	80	80	113	113	138	138	157,8	197	250	250
E	10	10	15	20	25	32	40	50	65	80	100
F	10	10	12	12,5	15	17	18,5	22	24	26	30
G	10	10	12,5	13,5	15	16,5	17,5	20,5	24	26	30
Kg/cm² bar	50	50	50	40	40	30	30	25	18	16	14
LBS - psi	725	725	725	580	580	435	435	362,5	261	232	203

CERTIFICATIONS

IDEAL®

290

IDEAL® BALL VALVE, FULL FLOW

SIZE	PRESSURE	CODE	PACKING
1/4" (DN 8)	50bar/725psi	2900014	12/192
3/8" (DN 10)	50bar/725psi	2900038	12/192
1/2" (DN 15)	50bar/725psi	2900012	12/156
3/4" (DN 20)	40bar/580psi	2900034	8/64
1" (DN 25)	40bar/580psi	2900100	8/64
1"1/4 (DN 32)	30bar/435psi	2900114	4/32
1"1/2 (DN 40)	30bar/435psi	2900112	2/26
2" (DN 50)	25bar/362,5psi	2900200	2/12

TECHNICAL SPECIFICATIONS

Female/female threads.
Flat lever handle in lined steel.
Body in nickel-plated brass.
Minimum and maximum working temperatures:
-20°C, 150°C in absence of steam.
Threads: ISO228
(equivalent to DIN EN ISO 228 and BS EN ISO 228).
Available also with NPT thread in the sizes 1/4" through 2".

MATERIALS

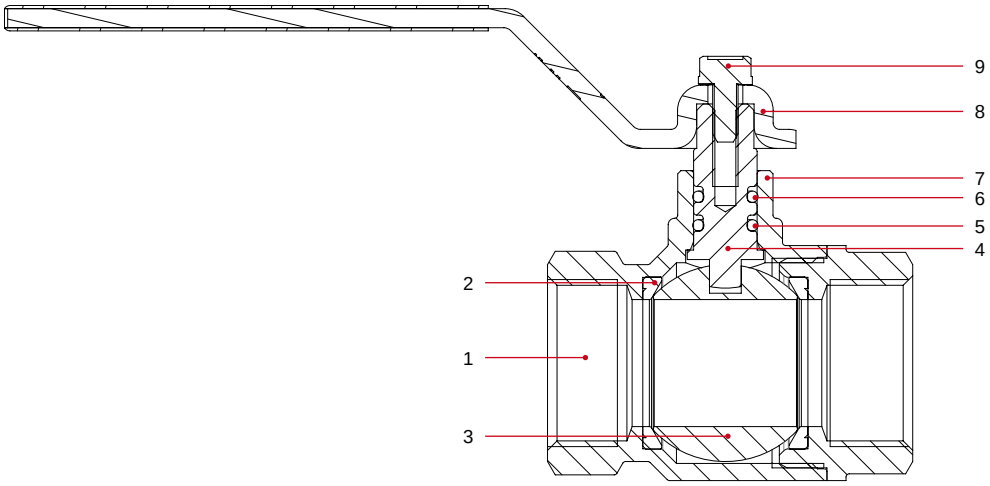

POS.	DESCRIPTION	N.	MATERIAL
1	End adapter	1	Nickel-plated brass CW617N
2	Seat	2	P.T.F.E.
3	Ball	1	Chrome-plated brass CW617N
4	Stem	1	Brass CW614N
5	O-Ring	1	NBR
6	O-Ring	1	VITON®
7	Body	1	Nickel-plated brass CW617N
8	Flat lever handle	1	Zinc-plated and plastic coated steel Fe.P.04
9	Screw	1	Zinc-plated steel Fe CB4

OVERALL DIMENSIONS

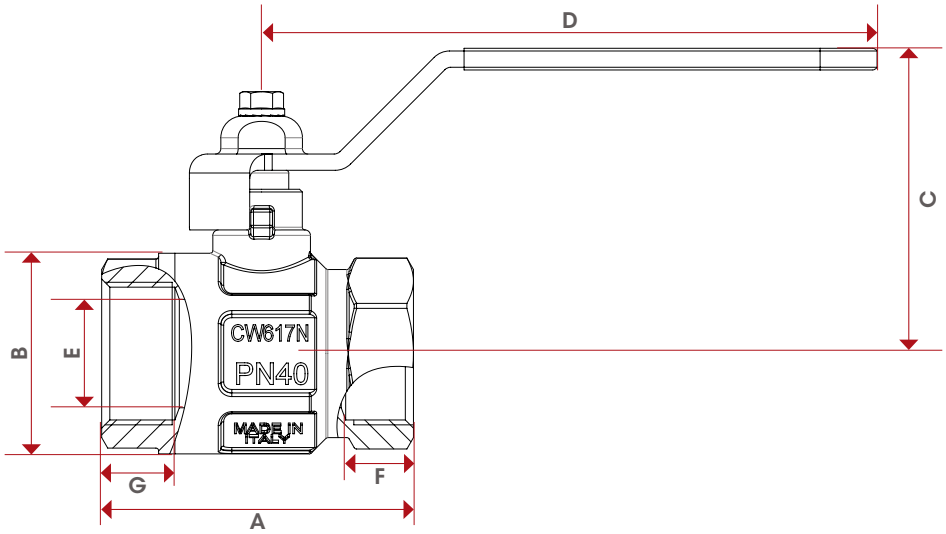

	1/4"	3/8"	1/2"	3/4"	1"	1"1/4	1"1/2	2"
DN	8	10	15	20	25	32	40	50
A	44,4	44,4	50,5	57,5	70	80,5	94,5	112,5
B	23,5	24	30,5	37	45,5	57	70	84
C	37	37	41	55	59	75	81	96
D	85,5	85,5	85,5	113,5	113,5	138	138	158
E	10	10	15	20	25	32	40	50
F	10	10	12	12,5	15	17	18,5	22
G	10	10	12,5	13,5	15	16,5	17,5	20,5
Kg/cm² bar	50	50	50	40	40	30	30	25
LBS - psi	725	725	725	580	580	435	435	362,5

CERTIFICATIONS

IDEAL®

091

IDEAL® BALL VALVE, FULL FLOW

SIZE	PRESSURE	CODE	PACKING
1/4" (DN 8)	50bar/725psi	0910014/N	12/192
3/8" (DN 10)	50bar/725psi	0910038/N	12/192
1/2" (DN 15)	50bar/725psi	0910012/N	12/120
3/4" (DN 20)	40bar/580psi	0910034/N	8/64
1" (DN 25)	40bar/580psi	0910100/N	8/40
1"1/4 (DN 32)	30bar/435psi	0910114/N	4/32
1"1/2 (DN 40)	30bar/435psi	0910112/N	2/24
2" (DN 50)	25bar/362,5psi	0910200/N	2/12

TECHNICAL SPECIFICATIONS

Male/female threads.
Lever handle in steel.
Body in nickel-plated brass.
Minimum and maximum working temperatures:
-20°C, 150°C in absence of steam.
Threads: ISO228
(equivalent to DIN EN ISO 228 and BS EN ISO 228).
Mention "N" in the code only to order the black handle.

MATERIALS

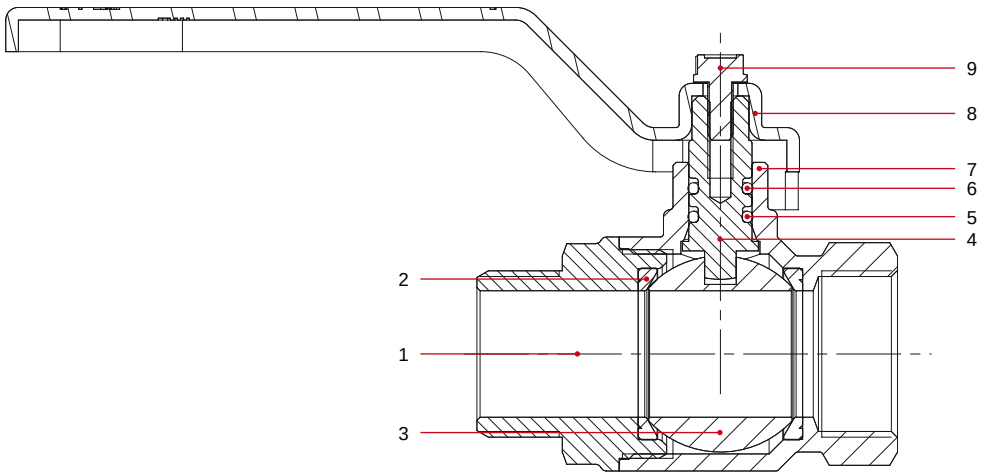

POS.	DESCRIPTION	N.	MATERIAL
1	End adapter	1	Nickel-plated brass CW617N
2	Seat	2	P.T.F.E.
3	Ball	1	Chrome-plated brass CW617N
4	Stem	1	Brass CW614N
5	O-Ring	1	NBR
6	O-Ring	1	VITON®
7	Body	1	Nickel-plated brass CW617N
8	Lever handle	1	Zinc-plated and varnished steel Fe.P.04
9	Screw	1	Zinc-plated steel Fe CB4

OVERALL DIMENSIONS

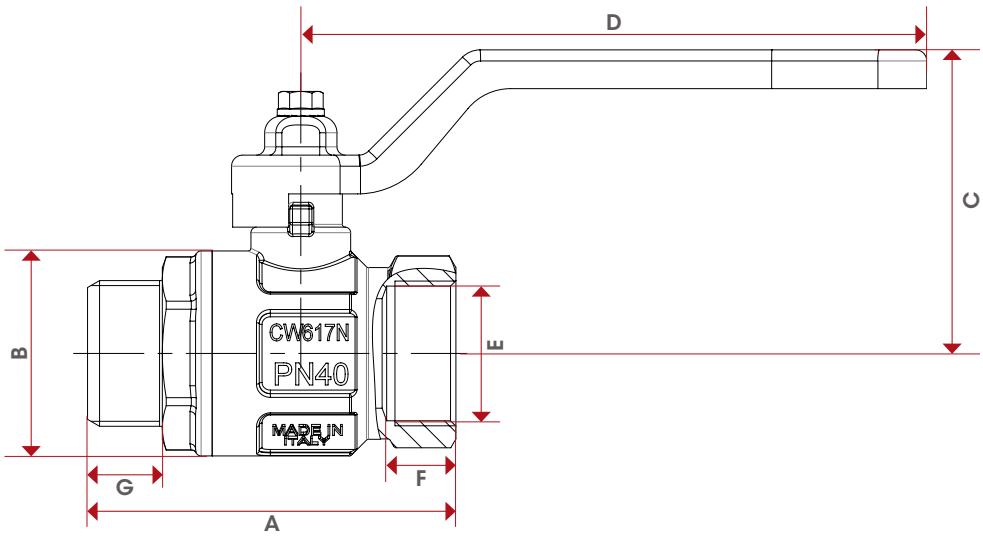

	1/4"	3/8"	1/2"	3/4"	1"	1"1/4	1"1/2	2"
DN	8	10	15	20	25	32	40	50
A	54	54	58,5	66,5	78,5	91,5	105,5	122
B	23,5	24	30,5	37	45,5	57	70	84
C	37	37	41	55	59	75	81	96
D	80	80	80	113	113	138	138	157,8
E	8	10	15	20	25	32	39	50
F	10	10	12	12,5	15	17	18,5	22
G	10,5	10,5	11,5	13,5	14,5	17	19	21
Kg/cm² bar	50	50	50	40	40	30	30	25
LBS - psi	725	725	725	580	580	435	435	362,5

CERTIFICATIONS

IDEAL®

092

IDEAL® BALL VALVE, FULL FLOW

SIZE	PRESSURE	CODE	PACKING
1/4" (DN 8)	50bar/725psi	0920014/N	15/240
3/8" (DN 10)	50bar/725psi	0920038/N	15/240
1/2" (DN 15)	50bar/725psi	0920012/N	12/132
3/4" (DN 20)	40bar/580psi	0920034/N	8/88
1" (DN 25)	40bar/580psi	0920100/N	8/64
1"1/4 (DN 32)	30bar/435psi	0920114/N	4/32

TECHNICAL SPECIFICATIONS

Female/female threads.
T handle in aluminium.
Body in nickel-plated brass.
Minimum and maximum working temperatures:
-20°C, 150°C in absence of steam.
Threads: ISO228
(equivalent to DIN EN ISO 228 and BS EN ISO 228).
Available also with NPT thread in the sizes 1/4" through 1".
Mention "N" in the code only to order the black handle.

MATERIALS

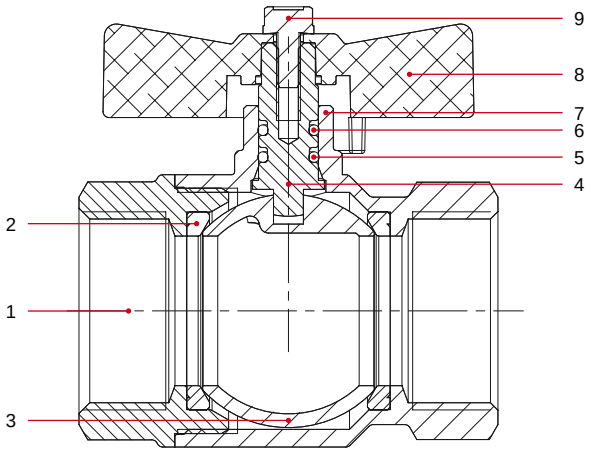

POS.	DESCRIPTION	N.	MATERIAL
1	End adapter	1	Nickel-plated brass CW617N
2	Seat	2	P.T.F.E.
3	Ball	1	Chrome-plated brass CW617N
4	Stem	1	Brass CW614N
5	O-Ring	1	NBR
6	O-Ring	1	VITON®
7	Body	1	Nickel-plated brass CW617N
8	T handle	1	Varnished aluminium
9	Screw	1	Zinc-plated steel Fe CB4

OVERALL DIMENSIONS

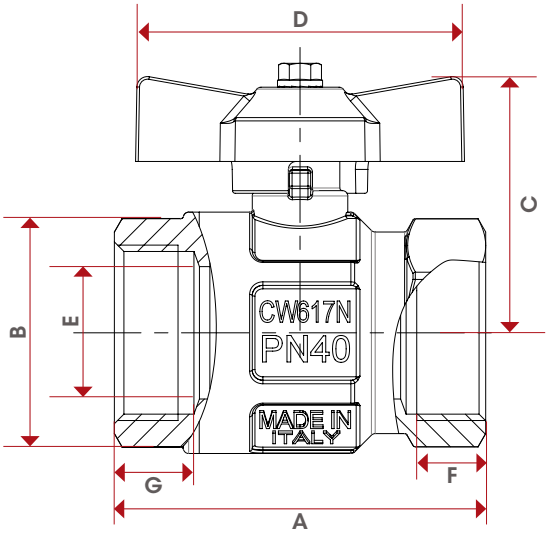

	1/4"	3/8"	1/2"	3/4"	1"	1"1/4
DN	8	10	15	20	25	32
A	44,4	44,4	50,5	57,5	70	80,5
B	23,5	24	30,5	37	45,5	57
C	37	37	41	47	51	64
D	47	47	47	62	62	70
E	10	10	15	20	25	32
F	10	10	12	12,5	15	17
G	10	10	12,5	13,5	15	16,5
Kg/cm² bar	50	50	50	40	40	30
LBS - psi	725	725	725	580	580	435

CERTIFICATIONS

IDEAL®

093

IDEAL® BALL VALVE, FULL FLOW

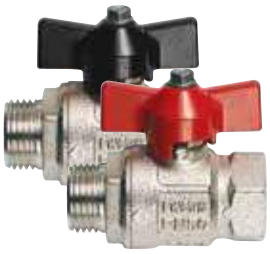

SIZE	PRESSURE	CODE	PACKING
1/4" (DN 8)	50bar/725psi	0930014/N	15/165
3/8" (DN 10)	50bar/725psi	0930038/N	15/165
1/2" (DN 15)	50bar/725psi	0930012/N	12/96
3/4" (DN 20)	40bar/580psi	0930034/N	8/64
1" (DN 25)	40bar/580psi	0930100/N	8/64
1"1/4 (DN 32)	30bar/435psi	0930114/N	4/32

TECHNICAL SPECIFICATIONS

Male/female threads.
T handle in aluminium.
Body in nickel-plated brass.
Minimum and maximum working temperatures:
-20°C, 150°C in absence of steam.
Threads: ISO228
(equivalent to DIN EN ISO 228 and BS EN ISO 228).
Mention "N" in the code only to order the black handle.

MATERIALS

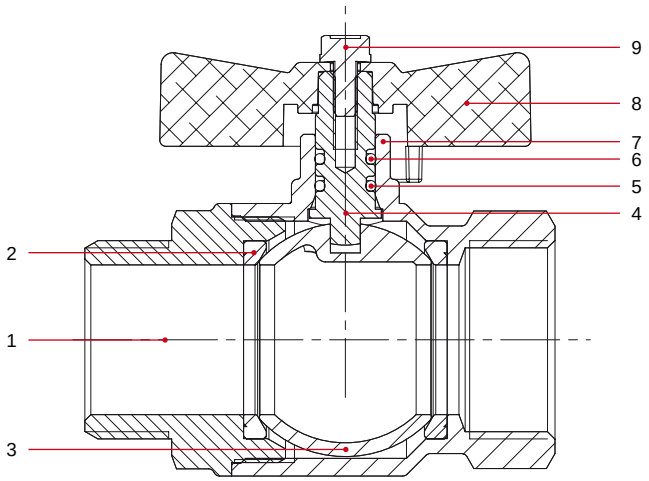

POS.	DESCRIPTION	N.	MATERIAL
1	Manicotto	1	Ottone nichelato CW617N
2	Sede	2	P.T.F.E.
3	Sfera	1	Ottone cromato CW617N
4	Asta di manovra	1	Ottone CW614N
5	Guarnizione	1	NBR
6	Guarnizione	1	VITON®
7	Corpo	1	Ottone nichelato CW617N
8	T handle	1	Varnished aluminium
9	Vite	1	Acciaio zincato Fe CB4

OVERALL DIMENSIONS

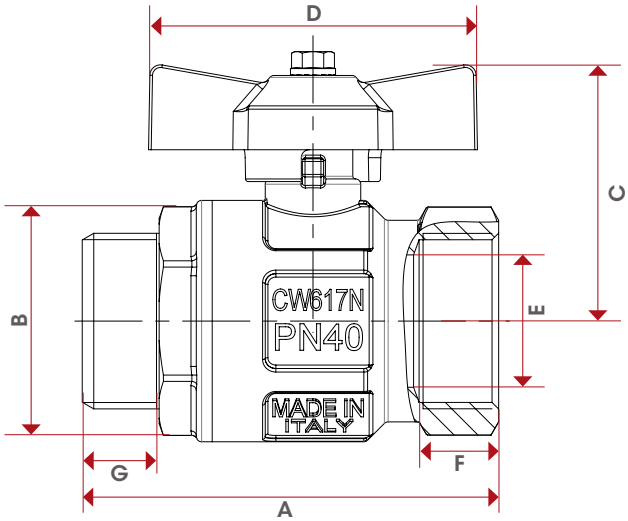

	1/4"	3/8"	1/2"	3/4"	1"	1"1/4
DN	8	10	15	20	25	32
A	54	54	58,5	66,5	78,5	91,5
B	23,5	24	30,5	37	45,5	57
C	37	37	41	47	51	64
D	47	47	47	62	62	70
E	8	10	15	20	25	32
F	10	10	12	12,5	15	17
G	10,5	10,5	11,5	13,5	14,5	17
Kg/cm² bar	50	50	50	40	40	30
LBS - psi	725	725	725	580	580	435

CERTIFICATIONS

IDEAL®

098

IDEAL® BALL VALVE, FULL FLOW FOR MANIFOLDS

SIZE	PRESSURE	CODE	PACKING
1/2" (DN 15)	50bar/725psi	0980012	8/88
3/4" (DN 20)	40bar/580psi	0980034	6/60
1" (DN 25)	40bar/580psi	0980100	6/48
1"1/4 (DN 32)	30bar/435psi	0980114	4/32
1"1/2 (DN 40)	30bar/435psi	0980112	2/16
2" (DN 50)	30bar/435psi	0980200	2/10

TECHNICAL SPECIFICATIONS

Male/female threads.
T handle in aluminium.
Body in nickel-plated brass.
Minimum and maximum working temperatures:
-20°C, 150°C in absence of steam.
Threads ISO228
(equivalent to DIN EN ISO 228 and BS EN ISO 228).
1"1/2 and 2" size with flat seat and lever handle in steel.

MATERIALS

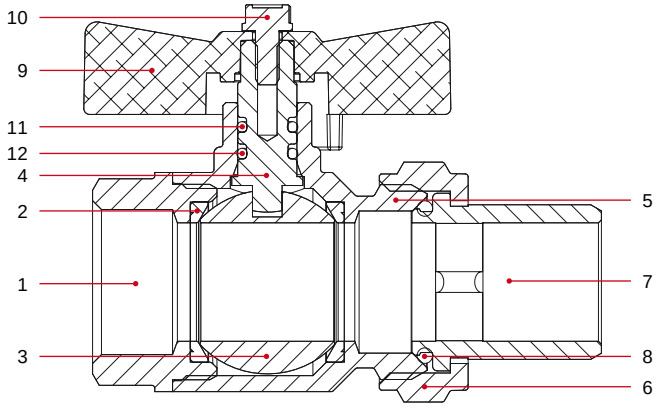

POS.	DESCRIPTION	N.	MATERIAL
1	End adapter	1	Nickel-plated brass CW617N
2	Seat	2	P.T.F.E.
3	Ball	1	Chrome-plated brass CW617N
4	Stem	1	Brass CW614N
5	Body	1	Nickel-plated brass CW617N
6	Nut	1	Nickel-plated brass CW617N
7	Union	1	Nickel-plated brass CW617N
8	O-Ring	1	NBR
9	T handle	1	Varnished aluminium
10	Screw	1	Zinc-plated steel Fe CB4
11	O-Ring	1	VITON®
12	O-Ring	1	NBR

OVERALL DIMENSIONS

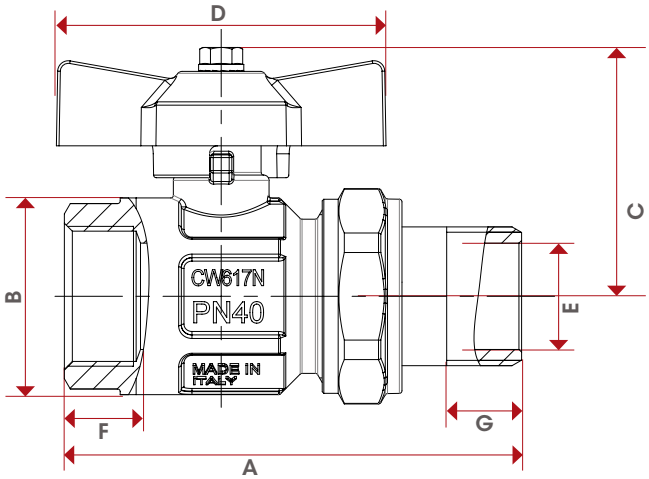

	1/2"	3/4"	1"	1"1/4	1"1/2	2"
DN	15	20	25	32	40	50
A	74	86	99	115	131,5	150,5
B	30,5	37	45,5	57	70	84
C	41	47	51,5	63,5	81	96
D	47	62	62	70	138	157,8
E	15	20	25	32	39	50
F	12,5	13,5	15	16,5	17,5	20,5
G	12	14	16	17	16	17
Kg/cm² bar	50	40	40	30	30	30
LBS - psi	725	580	580	435	435	435

CERTIFICATIONS

098S

IDEAL® BALL VALVE WITH O-RING, FULL FLOW FOR MANIFOLDS

SIZE	PRESSURE	CODE	PACKING
1/2" (DN 15)	50bar/725psi	0980012S	8/88
3/4" (DN 20)	40bar/580psi	0980034S/SB	6/60
3/4"x1"	40bar/580psi	098003400S/SB	6/48
1" (DN 25)	40bar/580psi	0980100S/SB	6/48
1"1/4 (DN 32)	30bar/435psi	0980114S	4/32

TECHNICAL SPECIFICATIONS

Male/female threads.
T handle in aluminium.
Body in nickel-plated brass.
Minimum and maximum working temperatures:
-20°C, 150°C in absence of steam.
Threads ISO228
(equivalent to DIN EN ISO 228 and BS EN ISO 228).
3/4" and 1" available also with blue handle.
Mention "SB" in the code only to order the blue handle.

MATERIALS 1"

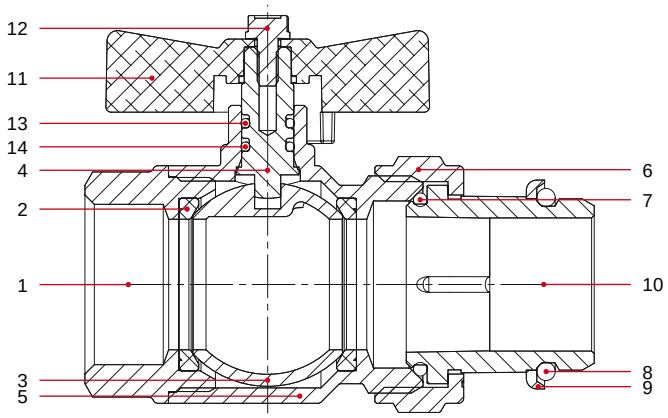

POS.	DESCRIPTION	N.	MATERIAL
1	End adapter	1	Nickel-plated brass CW617N
2	Seat	2	P.T.F.E.
3	Ball	1	Chrome-plated brass CW617N
4	Stem	1	Brass CW614N
5	Body	1	Nickel-plated brass CW617N
6	Nut	1	Nickel-plated brass CW617N
7	O-Ring	1	NBR
8	O-Ring	1	NBR
9	Ring	1	Steel Fe
10	Union	1	Nickel-plated brass CW617N
11	T handle	1	Varnished aluminium
12	Screw	1	Zinc-plated steel Fe CB4
13	O-Ring	1	VITON®
14	O-Ring	1	NBR

MATERIALS 3/4"X1"

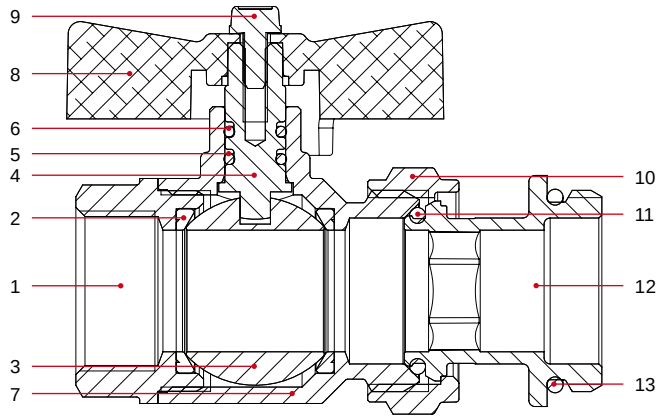

POS.	DESCRIPTION	N.	MATERIAL
1	End adapter	1	Nickel-plated brass CW617N
2	Seat	2	P.T.F.E.
3	Ball	1	Chrome-plated brass CW617N
4	Stem	1	Brass CW614N
5	O-Ring	1	NBR
6	O-Ring	1	VITON®
7	Body	1	Nickel-plated brass CW617N
8	T handle	1	Aluminium
9	Screw	1	Zinc-plated steel Fe CB4
10	Nut	1	Nickel-plated brass CW617N
11	O-Ring	1	NBR
12	Union	1	Nickel-plated brass CW617N
13	O-Ring	1	EPDM

OVERALL DIMENSIONS

	3/4"X1"
DN	20
A	86,5
B	37
C	47
D	62
Kg/cm² bar	40
LBS - psi	580

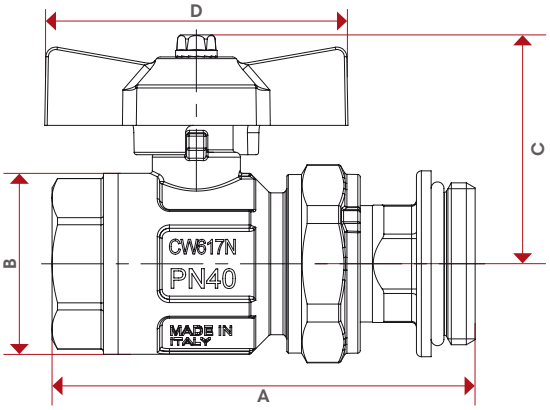

	1/2"	3/4"	1"	1"1/4
DN	15	20	25	32
A	74	86	98	113
B	30,5	37	45,5	57
C	41	47	51,5	63,5
D	47	62	62	70
Kg/cm² bar	50	40	40	30
LBS - psi	725	580	580	435

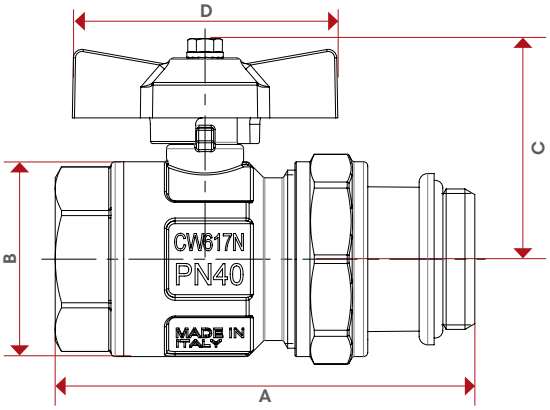

CERTIFICATIONS

IDEAL®

098SDC

IDEAL® BALL VALVE WITHOUT UNION, FULL FLOW FOR MANIFOLDS

SIZE	PRESSURE	CODE	PACKING
3/4" (DN 20)	40bar/580psi	0980034SDC/B	8/88
1" (DN 25)	40bar/580psi	0980100SDC/B	8/64
1"1/4 (DN 32)	30bar/435psi	0980114SDC/B	4/40

TECHNICAL SPECIFICATIONS

Male/female threads.
T handle in aluminium.
Body in nickel-plated brass.
Minimum and maximum working temperatures:
-20°C, 150°C in absence of steam.
Threads ISO228
(equivalent to DIN EN ISO 228 and BS EN ISO 228).
Male thread with conical seat.
Available sizes: 3/4"F x 1"M -1"F x 1"1/4M -1"1/4F x 1"1/2M.
Mention "B" in the code to order the blue T handle.

MATERIALS

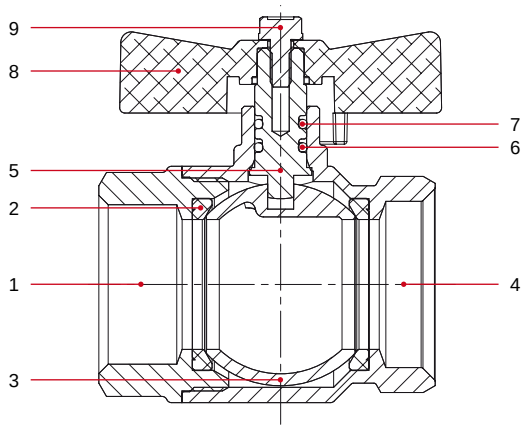

POS.	DESCRIPTION	N.	MATERIAL
1	End adapter	1	Nickel-plated brass CW617N
2	Seat	2	P.T.F.E.
3	Ball	1	Chrome-plated brass CW617N
4	Body	1	Nickel-plated brass CW617N
5	Stem	1	Brass CW614N
6	O-Ring	1	NBR
7	O-Ring	1	VITON®
8	T handle	1	Varnished aluminium
9	Screw	1	Zinc-plated steel Fe CB4

OVERALL DIMENSIONS

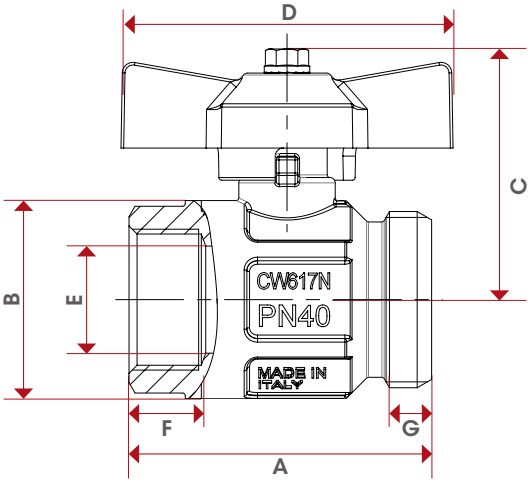

	3/4"	1"	1"1/4
DN	20	25	32
A	56,5	64,75	76
B	37	45,5	57
C	47	51,5	64
D	62	62	70
E	20	25	32
F	13,5	15	16,5
G	8	10,5	14
Kg/cm² bar	40	40	30
LBS - psi	580	580	435

CERTIFICATIONS

IDEAL®

FLOW RATE AND PRESSURE DROP CHART

WITH WATER

Art: 090 - 091 - 092 - 093

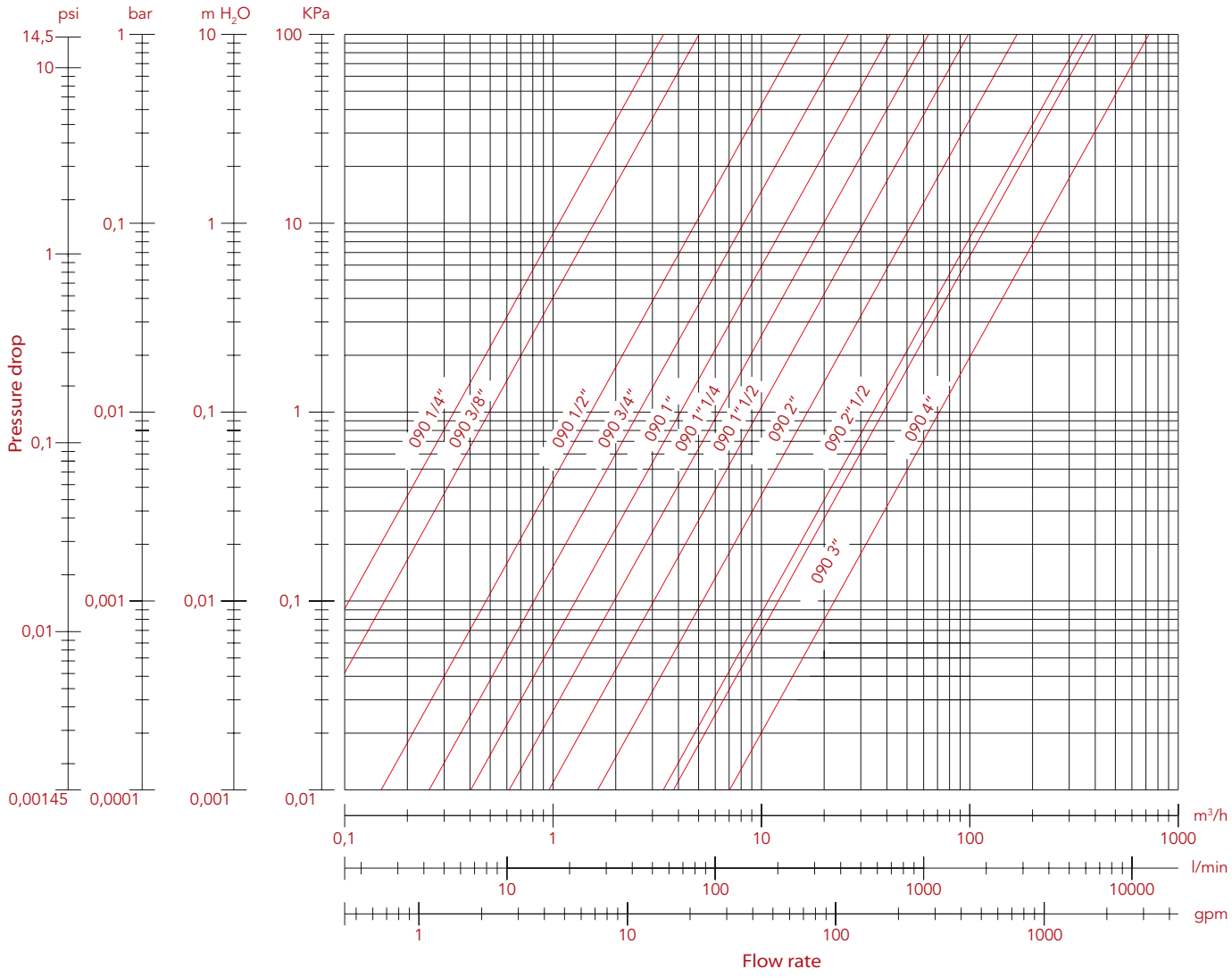

SIZE	1/4"	3/8"	1/2"	3/4"	1"	1"1/4	1"1/2	2"	2"1/2	3"	4"
Ø	10	10	15	20	25	32	40	50	65	80	100
Kv	3,45	5,00	15,65	26,26	41,44	63,69	101	169	348	390	725

PRESSURE-TEMPERATURE DIAGRAM

BALL VALVES

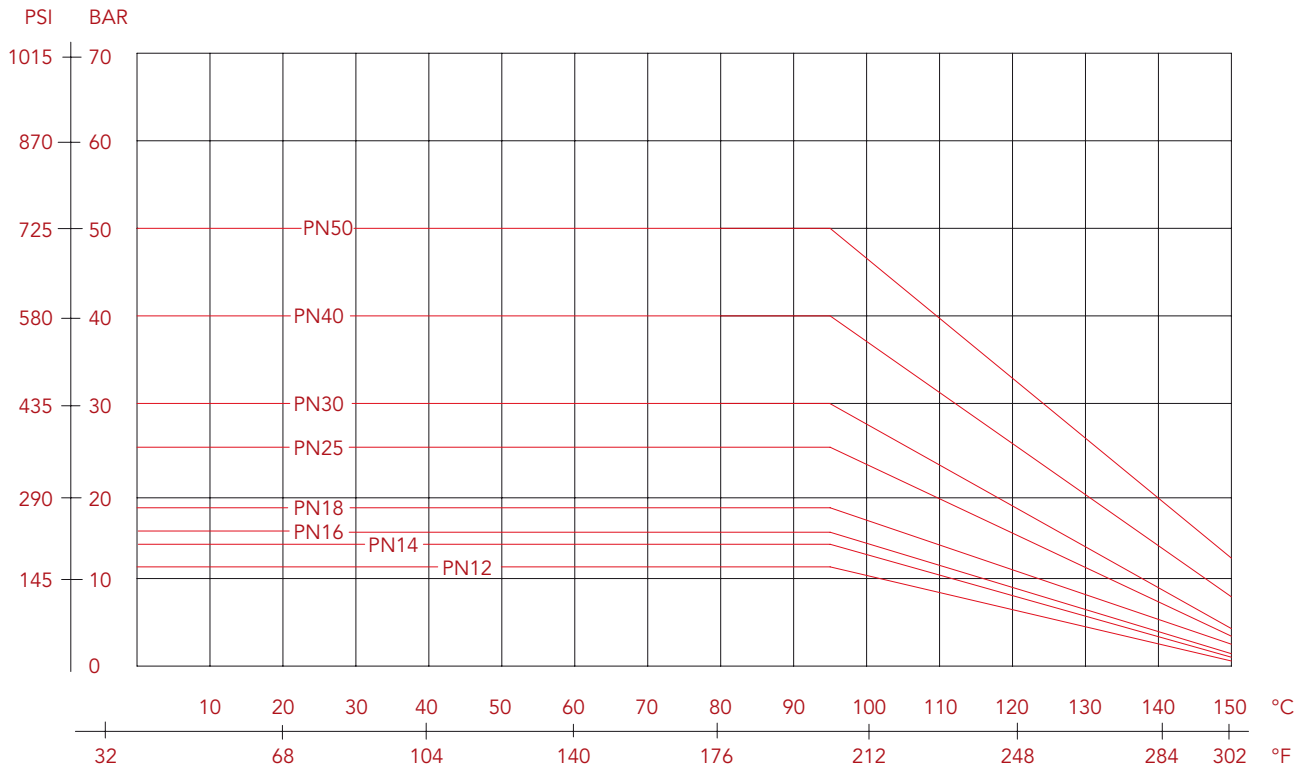

The values shown by the dropping lines state the maximum limit of employment of the valves.
The shown valves are approximate.

298

IDEAL® ANGLE BALL VALVE, FULL FLOW FOR MANIFOLDS

SIZE	PRESSURE	CODE	PACKING
1/2" (DN 15)	50bar/725psi	2980012	6/96
3/4" (DN 20)	40bar/580psi	2980034	6/48
1" (DN 25)	40bar/580psi	2980100	4/32

TECHNICAL SPECIFICATIONS

Male/female threads.
T handle in aluminium.
Angle body in nickel-plated brass.
Minimum and maximum working temperatures:
-20°C, 150°C in absence of steam.
Threads ISO228
(equivalent to DIN EN ISO 228 and BS EN ISO 228).

MATERIALS

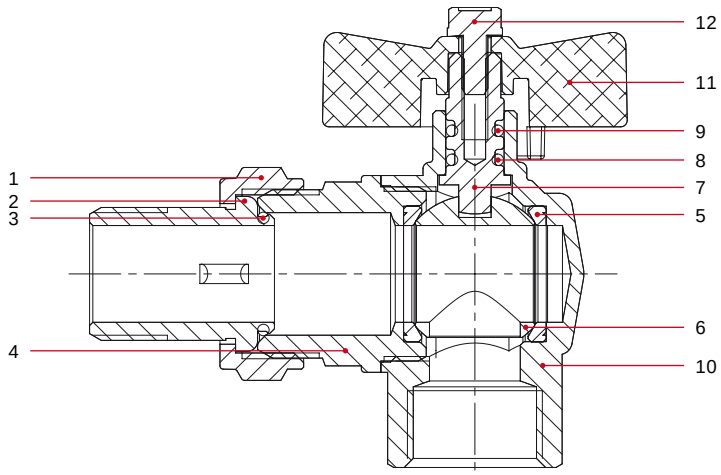

POS.	DESCRIPTION	N.	MATERIAL
1	Nut	1	Nickel-plated brass CW617N
2	Union	1	Nickel-plated brass CW617N
3	O-Ring	1	NBR
4	End adapter	1	Nickel-plated brass CW617N
5	Seat	2	P.T.F.E.
6	Ball	1	Chrome-plated brass CW617N
7	Stem	1	Brass CW614N
8	O-Ring	1	NBR
9	O-Ring	1	VITON®
10	Body	1	Nickel-plated brass CW617N
11	T handle	1	Varnished aluminium
12	Screw	1	Zinc-plated steel Fe CB4

OVERALL DIMENSIONS

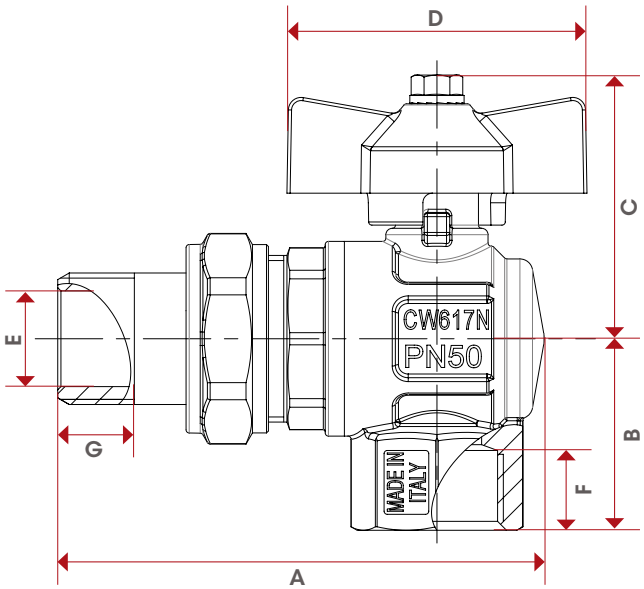

	1/2"	3/4"	1"
DN	15	20	25
A	76,2	89,5	106,5
B	30	33,5	39,75
C	41	47	51
D	47	62	62
E	14	18	23
F	12,5	13,5	15
G	12	14	16
Kg/cm² bar	50	40	40
LBS - psi	725	580	580

CERTIFICATIONS

IDEAL®

298S

IDEAL® ANGLE BALL VALVE WITH O-RING, FULL FLOW FOR MANIFOLDS

SIZE	PRESSURE	CODE	PACKING
1/2" (DN 15)	50bar/725psi	2980012S	6/96
3/4" (DN 20)	40bar/580psi	2980034S/SB	6/48
1" (DN 25)	40bar/580psi	2980100S/SB	4/32

TECHNICAL SPECIFICATIONS

Male/female threads.
T handle in aluminium.
Angle body in nickel-plated brass.
Minimum and maximum working temperatures:
-20°C, 150°C in absence of steam.
Threads ISO228
(equivalent to DIN EN ISO 228 and BS EN ISO 228).
3/4" and 1" available also with blue handle.
Mention "SB" in the code only to order the blue handle.

MATERIALS

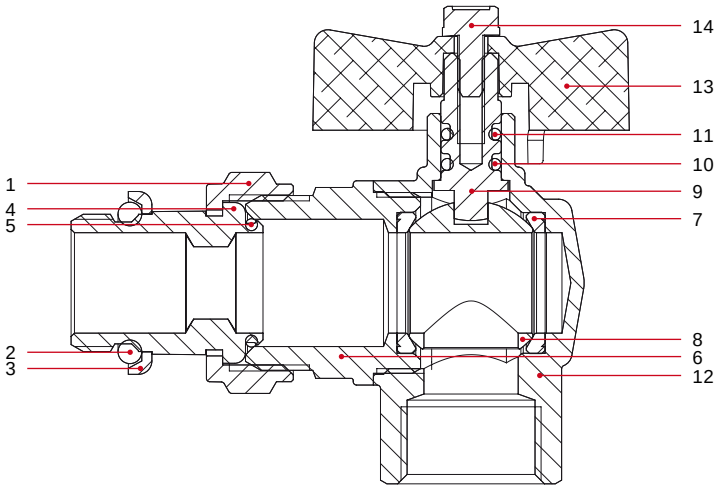

POS.	DESCRIPTION	N.	MATERIAL
1	Nut	1	Nickel-plated brass CW617N
2	O-Ring	1	NBR
3	Ring	1	Steel Fe
4	Union	1	Nickel-plated brass CW617N
5	O-Ring	1	NBR
6	End adapter	1	Nickel-plated brass CW617N
7	Seat	2	P.T.F.E.
8	Ball	1	Chrome-plated brass CW617N
9	Stem	1	Brass CW614N
10	O-Ring	1	NBR
11	O-Ring	1	VITON®
12	Body	1	Nickel-plated brass CW617N
13	T handle	1	Varnished aluminium
14	Screw	1	Zinc-plated steel Fe CB4

OVERALL DIMENSIONS

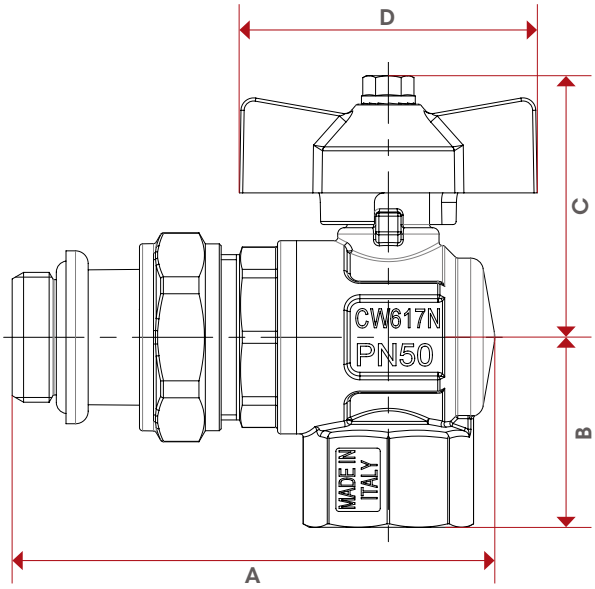

	1/2"	3/4"	1"
DN	15	20	25
A	76,2	89,5	105,5
B	30	33,5	39,75
C	41	47	51
D	47	62	62
Kg/cm² bar	50	40	40
LBS - psi	725	580	580

CERTIFICATIONS

IDEAL®

298SDC

IDEAL® ANGLE BALL VALVE WITHOUT UNION, FULL FLOW FOR MANIFOLDS

SIZE	PRESSURE	CODE	PACKING
3/4" (DN 20)	40bar/580psi	2980034SDC/B	6/60
1" (DN 25)	40bar/580psi	2980100SDC/B	4/52

TECHNICAL SPECIFICATIONS

Male/female threads.
T handle in aluminium.
Angle body in nickel-plated brass.
Minimum and maximum working temperatures:
-20°C, 150°C in absence of steam.
Threads ISO228
(equivalent to DIN EN ISO 228 and BS EN ISO 228).
Male thread with conical seat.
Available sizes: 3/4"F x 1"M - 1"F x 1"1/4M
Mention "B" in the code to order the blue T handle.

MATERIALS

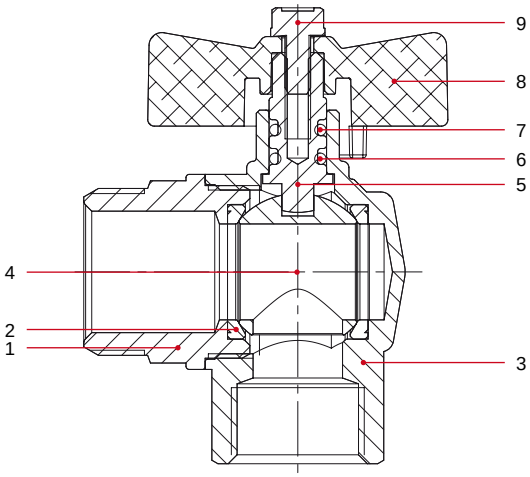

POS.	DESCRIPTION	N.	MATERIAL
1	End adapter	1	Nickel-plated brass CW617N
2	Seat	2	P.T.F.E.
3	Body	1	Nickel-plated brass CW617N
4	Ball	1	Chrome-plated brass CW617N
5	Stem	1	Brass CW614N
6	O-Ring	1	NBR
7	O-Ring	1	VITON®
8	T handle	1	Varnished aluminium
9	Screw	1	Zinc-plated steel Fe CB4

OVERALL DIMENSIONS

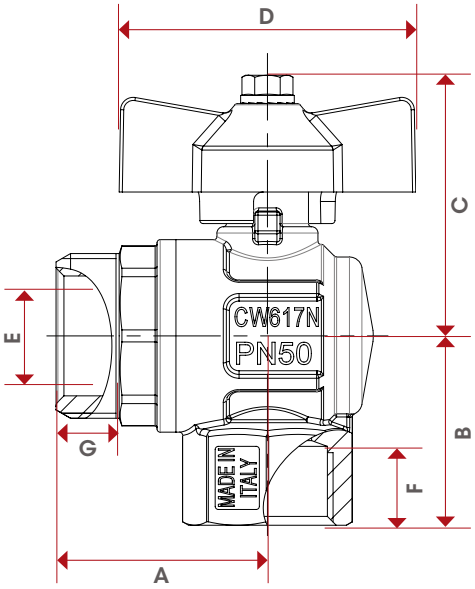

	3/4"	1"
DN	20	25
A	40	47
B	33,5	39,75
C	47	51
D	62	62
E	18	23
F	13,5	15
G	12	14
Kg/cm² bar	40	40
LBS - psi	580	580

CERTIFICATIONS

IDEAL®

FLOW RATE AND PRESSURE DROP CHART

WITH WATER

Art: 298

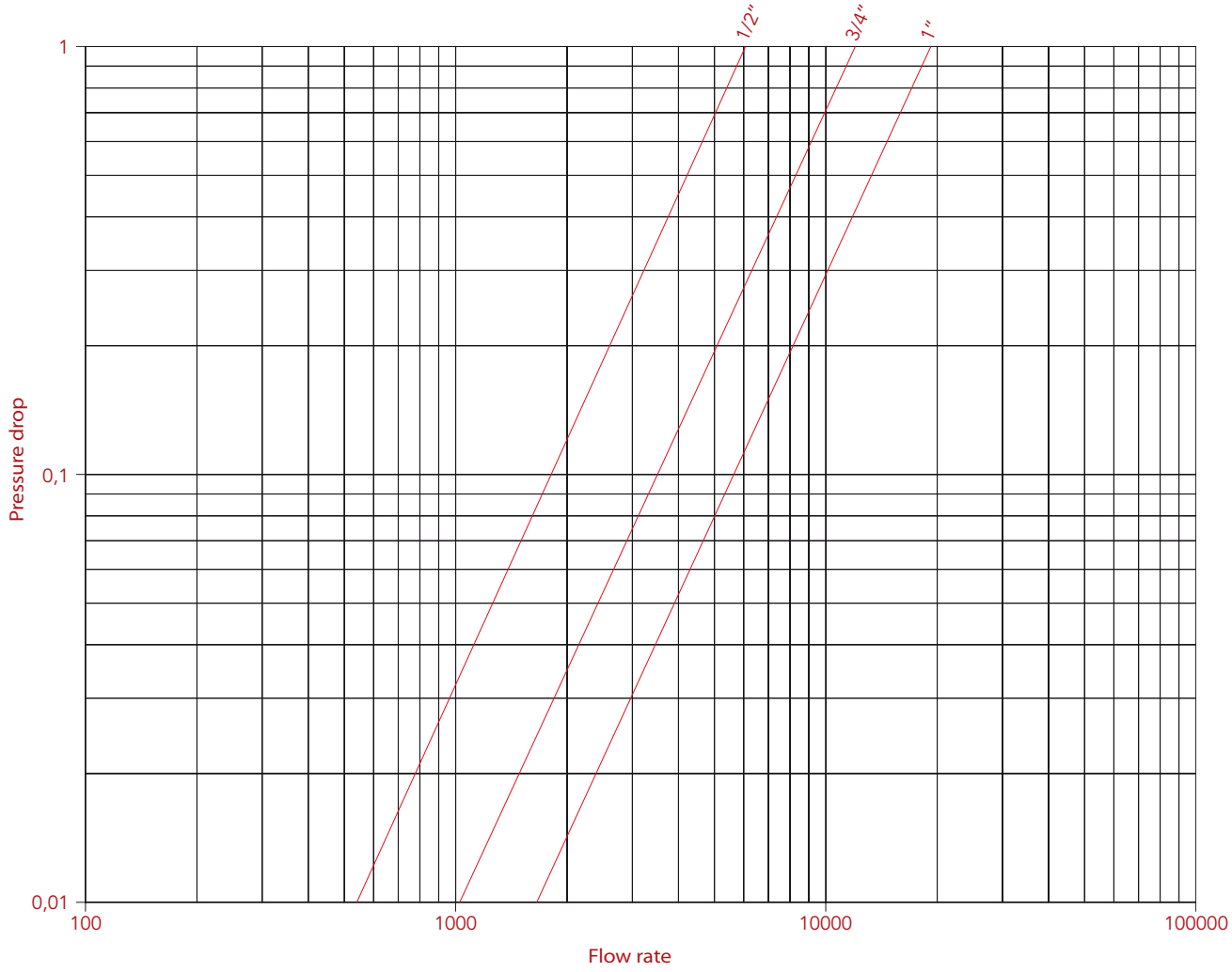

SIZE	1/2"	3/4"	1"
Ø	15	20	25
Kv	6,00	12,00	19,20

PRESSURE-TEMPERATURE DIAGRAM

BALL VALVES

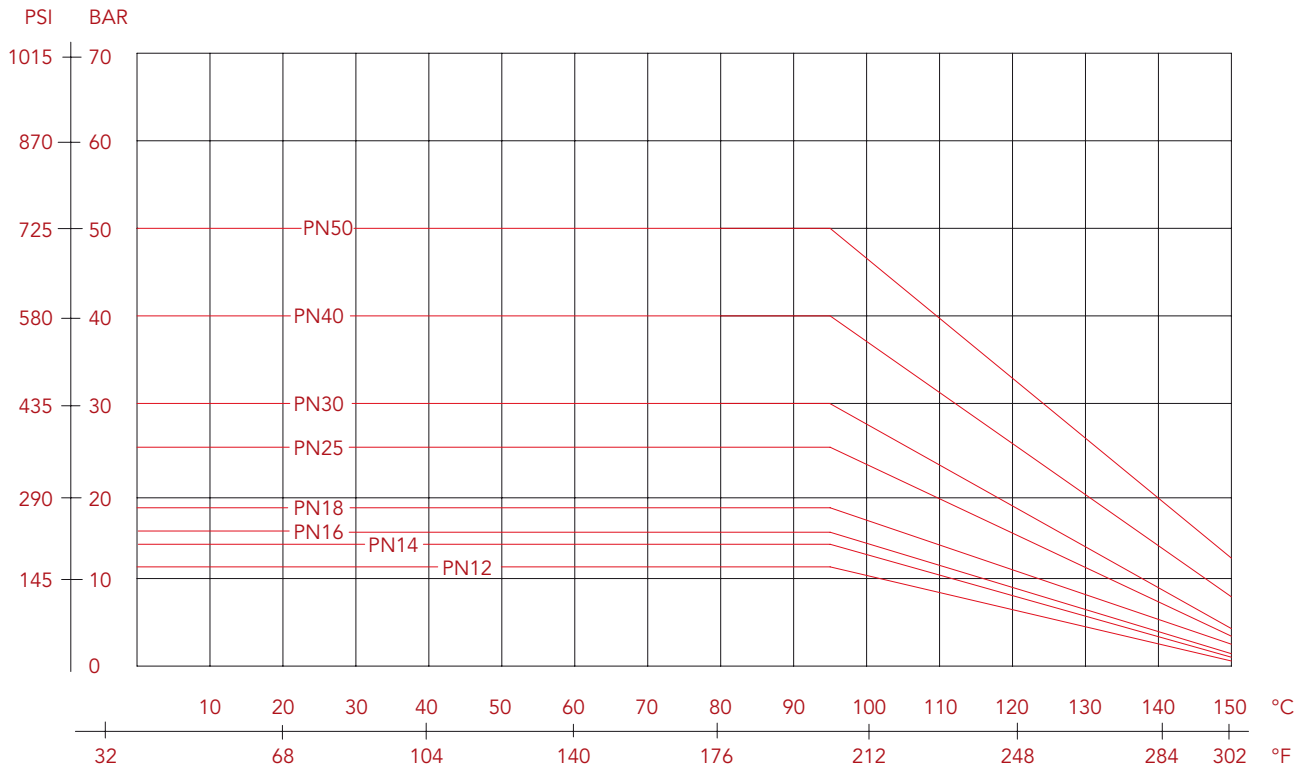

The values shown by the dropping lines state the maximum limit of employment of the valves.
The shown valves are approximate.

MANIFACTURER INSTRUCTIONS

Installation

The itap S.p.A.'s valves are bi-directional, that means they manage the flow in both the directions. The valves are composed by a ball, two seal in PTFE material, one stem, two sailing rings (O-Rings), one handle and a couple of parts made of brass (body and end adopter) that contain them and that are assembled by means of threat and a sealed material to obtain their aim. To avoid that the sealing material gets brake and than the valve gets lose the connection between body and the end adopter, it's necessary to avoid to submit the two parts under the influence of a torque.
For their installation ones have to use the normal hydraulic practices, and in particular:

• Ones have to be sure that the two pipes are correctly aligned,

• during the assembling ones have to apply the assembling tool at the end that is nearest to the pipe,

• the application of the sealing materials by the fitter (PTFE or hempen cloth) must be limited at the threat zone. An excess should interferes in the ball-gasket's closure zone, compromising the tightness.

• In the case that the fluid transported presents some impurities (dust, water too hard, etc.) ones have to remove these impurities by the means of a filter. Otherwise they could damage the seals.

Disassembly the installed valve

To remove the valve from the pipe line or anyhow before to unscrew the junctions linked to it:
• wear the clothing protective normally required to work with the fluid transported within the line.
• Depressurizze the line and operate in this way:
-positioning the valve in opened position and than empty the line
-handle the valve to put down the residue pressure contained inside the space between the ball and the body before of remove it from the line,
-during the disassembly apply the screw tool at the end of the valve nearest the pipe

Maintenance

Verify the valves periodically, in function oh their application's field and in function of their work conditions, to be sure that the valves work correctly.

NOTES

We reserve the right to make improvements and changes to the products described herein and to the relative technical data, at any time and without forewarning.

IDEAL®

ITAP S.p.A.
Via Ruca 19
25065 Lumezzane
Brescia (ITALIA)
Tel 030 89270
Fax 030 8921990
www.itap.it-info@itap.it

09/2016